Homework 8

Due Thursday, December 10, 2015 no tags

Question 1. Infinite range Ising model

A rare analytic solution to an interacting system involves the infinite-range Ising model of a ferromagnet. Of course, the model is somewhat artificial. Consider spins $S_i = \pm 1$ that are located on $i = 1, 2, \ldots N$ sites of a regular lattice. All spins interact equally with each other, through a positive coupling constant J_∞. There is also a constant external magnetic field H which tends to align the spins in the direction (sign) of the field. The energy of interaction for the system is

$$E = -\frac{J_\infty}{2} \sum_{i=1}^{N} \sum_{j=1}^{N} S_i S_j - H \sum_{i=1}^{N} S_i,$$

and the partition function is

$$Z = \sum_{S_1=-1}^{+1} \sum_{S_2=-1}^{+1} \cdots \sum_{S_N=-1}^{+1} e^{-E/k_B T}.$$

where k_B is Boltzmann's constant and T is temperature. This model has a second order phase transition: For $H = 0$ and low temperatures, spins are aligned on average, giving rise to a nonzero magnetization. At high temperatures they are randomly oriented, giving no net magnetization. A phase transition occurs at a particular critical temperature T_c.

1. The fact that all spins interact with each other with equal strength (without regard to how far apart the spins may be) is artificial. For example, why does the model only make sense if $J_\infty = J/N$, where J is a constant independent of N?
2. In any case, the model has value because it can be solved exactly. One can do all the sums in the partition function by the method known variously as the Hubbard-Stratonovich transformation, or as auxiliary fields, or as the Martin-Siggia-Rose representation, or as "completing the square". To get started, prove the trivial (but easily generalizable) identity

$$\exp \frac{a}{2N} x^2 = \int_{-\infty}^{\infty} \frac{dy}{\sqrt{2\pi/Na}} e^{-\frac{Na}{2} y^2 + axy}$$

where Re $a > 0$. Note that the quadratic dependence on x in the exponential has been reduced to a linear dependence on x; the price being the introduction of a new variable y. Note that one can introduce a similar transformation for a vector $\vec{y}$, or a continuous field $y(x)$, in which case a becomes a matrix.

3. Show that the partition function for the system above is

$$Z = \int_{-\infty}^{\infty} \frac{dy}{\sqrt{2\pi k_B T/NJ}} e^{-NL(y)/k_B T}$$

(as a hint, let $x = \sum_{i=1}^{N} S_i$), and

$$L = \frac{J}{2} y^2 - k_B T \ln 2 \cosh(H + Jy)/k_B T.$$

Hence the sums in the partition function have been replaced by an integral over the auxiliary variable y.

4. In the thermodynamic limit, $N \to \infty$, show that the partition function can be evaluated exactly (called a saddle-point evaluation) as

$$Z = \sum_{\alpha} \exp\left(-NL(H, J, T, y_\alpha)\right)/k_B T,$$

find the equation satisfied by y_α, and explain what the index α is. What is the probability of being in the state specified by y_α? Show that the magnetization per spin is

$$m = (k_B T/N) \partial \ln Z/\partial H = y_0,$$

where y_0 is the position of the global minimum of L.

5. Solve for y_α graphically for $H = 0$. Show there is a phase transition, and find T_c. Discuss the stability of solutions for y_α above and below T_c.
6. Calculate the isothermal susceptibility $\chi_T = \partial M/\partial H$. For $H = 0$ show that χ_T diverges to infinity both above and below T_c, and find the leading and next to leading behavior of χ_T in terms of the reduced temperature $t = (T - T_c)/T_c$.

Question 2. Domain boundary in an Ising model

One can use a two dimensional Ising model to describe a two phase interface: the line separating regions of positive $(+)$ magnetization from regions of negative $(-)$ magnetization as shown in the figure below

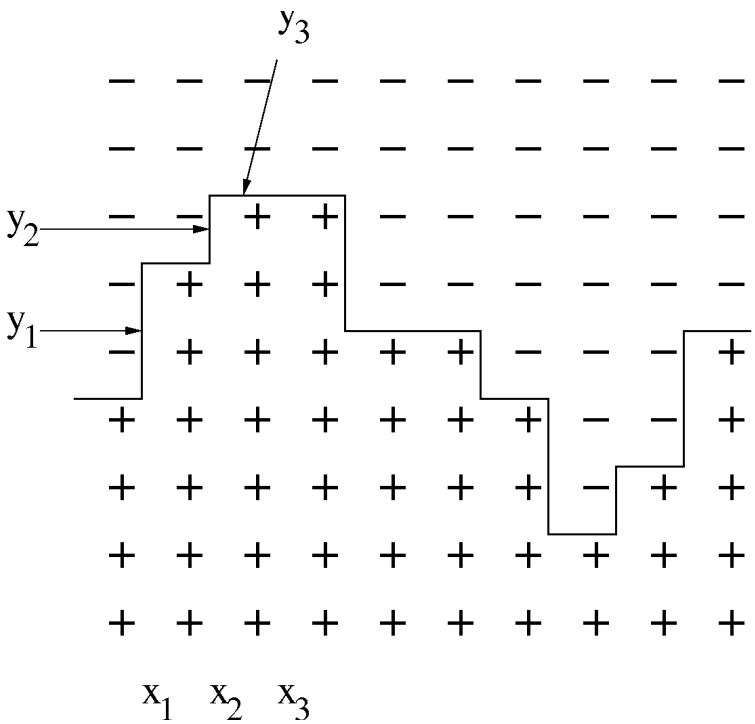

The spins are arranged on a $N \times N$ square lattice with unit spacing. The energy of the system is,

$$E = -J \sum_{\langle i,j \rangle} S_i S_j, \qquad S_i, S_j = \pm 1.$$

1. What does the quantity $\sum_p (1 + |y_p|)$ represent ? The quantity y_p is the height of the step located at x_p (for example, $y_1 = 2, y_2 = 1, y_3 = 0$ in the figure).
2. Show that the energy of the interface is

$$E = 2JN + 2J \sum_{p=1}^{N} |y_p|.$$

3. We now assume that the left end of the interface is fixed, while the right one is free to move. The heights y_p are assumed to be integer random variables ranging from $-\infty$ to $+\infty$. Show that the partition function of the interface is

$$Z = \left[e^{-2\beta J} \coth(\beta J) \right]^N$$

(recall the geometric sum $\sum_{n=0}^{\infty} q^n = 1/(1-q)$.)

4. Calculate the surface tension (i.e., the free energy per unit length $\sigma = F/N$), and the internal energy per unit length $E/N = (1/N)\partial \ln Z / \partial \beta$. Calculate the limits of both quantities as $\beta J \ll 1$ and $\beta J \gg 1$, and comment on the results.

---

pdf version